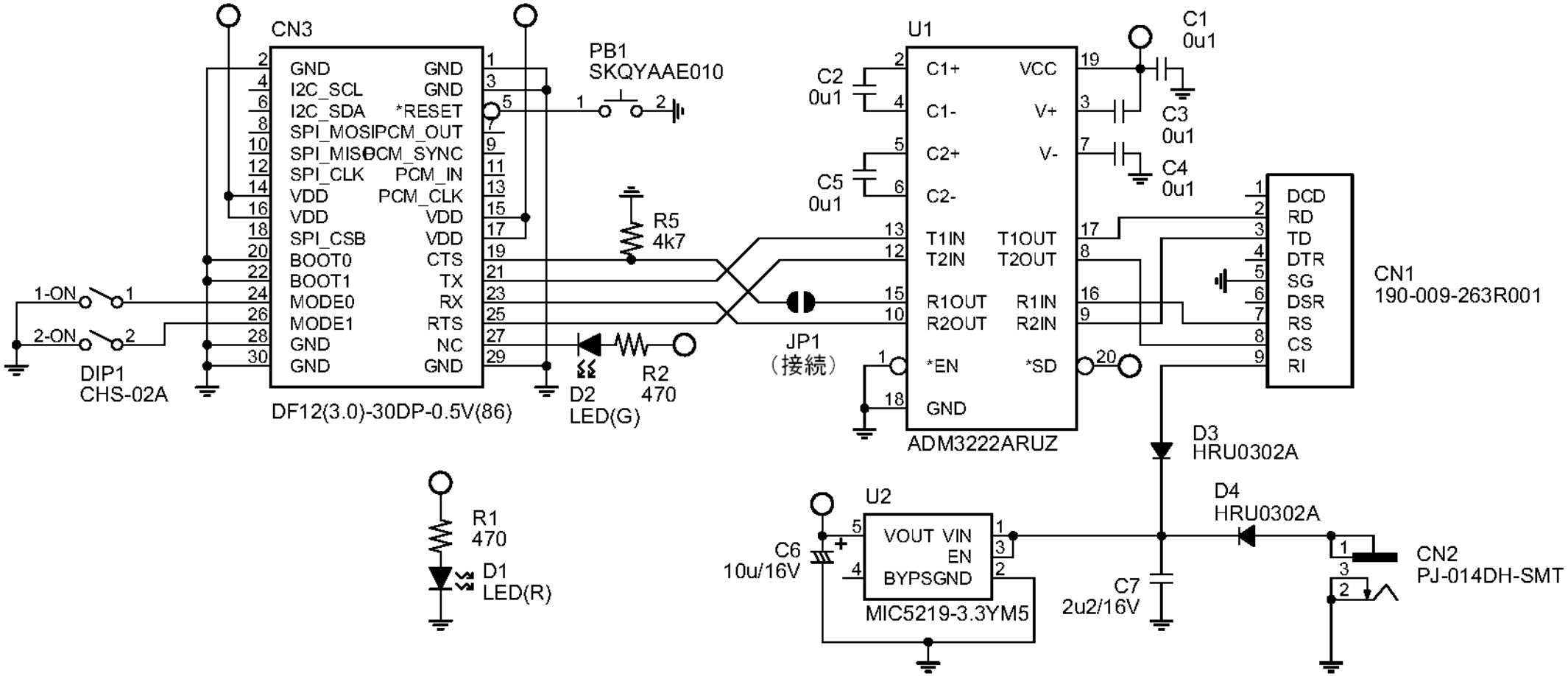
CN3
GND
I2C_SCL
I2C_SDA
SPI_MOSI
SPI_MISO
SPI_CLK
VDD
VDD
SPI_CSB
BOOT0
BOOT1
MODE0
MODE1
GND
GND
GND
GND
*RESET
PCM_OUT
PCM_SYNC
PCM_IN
PCM_CLK
VDD
VDD
CTS
TX
RX
RTS
NC
GND
DF12(3.0)-30DP-0.5V(86)
PB1
SKQYAAE010
R5
4k7
D2
LED(G)
R2
470
JP1
（接続）
1-ON
2-ON
DIP1
CHS-02A
R1
470
D1
LED(R)
U1
C1+
C1-
C2+
C2-
T1IN
T2IN
R1OUT
R2OUT
*EN
GND
VCC
V+
V-
T1OUT
T2OUT
R1IN
R2IN
*SD
ADM3222ARUZ
C2
0u1
C5
0u1
C1
0u1
C3
0u1
C4
0u1
CN1
190-009-263R001
DCD
RD
TD
DTR
SG
DSR
RS
CS
RI
D3
HRU0302A
D4
HRU0302A
U2
VOUT
VIN
EN
BYPSGND
MIC5219-3.3YM5
C6
10u/16V
C7
2u2/16V
CN2
PJ-014DH-SMT

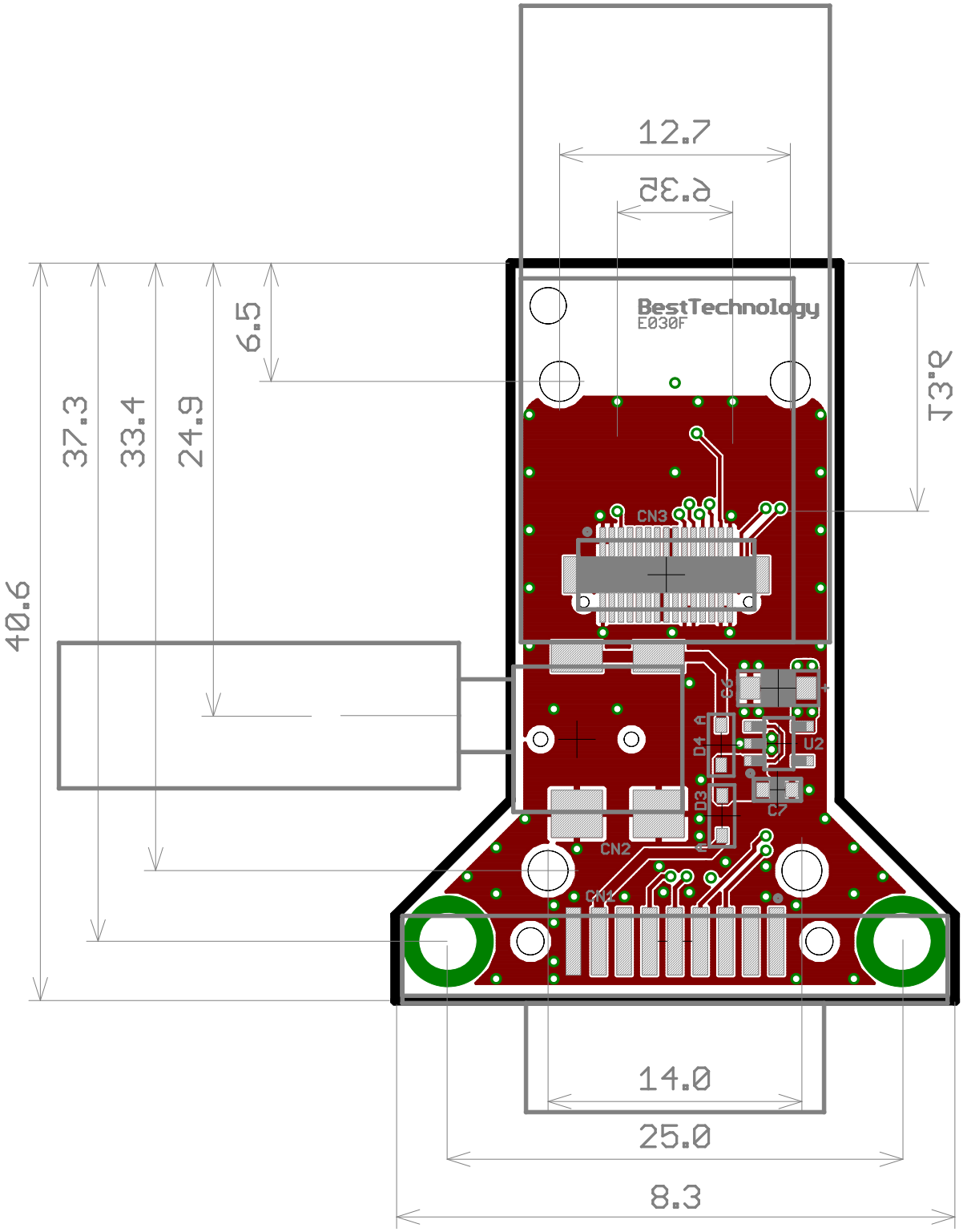
12.7
6.35
6.5
37.3
33.4
24.9
40.6
13.2
BestTechnology
E030F
CN3
CN2
CN1
C6
D4
D3
U2
C7
14.0
25.0
8.3

D2
D1
A
A
R2
R1
ON
DIP1
1
PB1
R6
JP1
U1
C4
C5
C2
C1
C3
12.7
6.35
13.6
2.2
24.8
33.4
37.3
40.8
14.0
25.0
8.3